# DEPARTMENT OF PUBLIC WORKS - ENGINEERING DIVISION

103 ADAMS AVENUE LEWISTON, MAINE 04240 TEL. (207) 513-3003 FAX (207) 784-5647

PUBLIC WORKS DIRECTOR
David A. Jones, P.E.

CITY ENGINEER
Richard C. Burnham, P.E.

PROJECT ENGINEER
Justin J. Early, P.E.

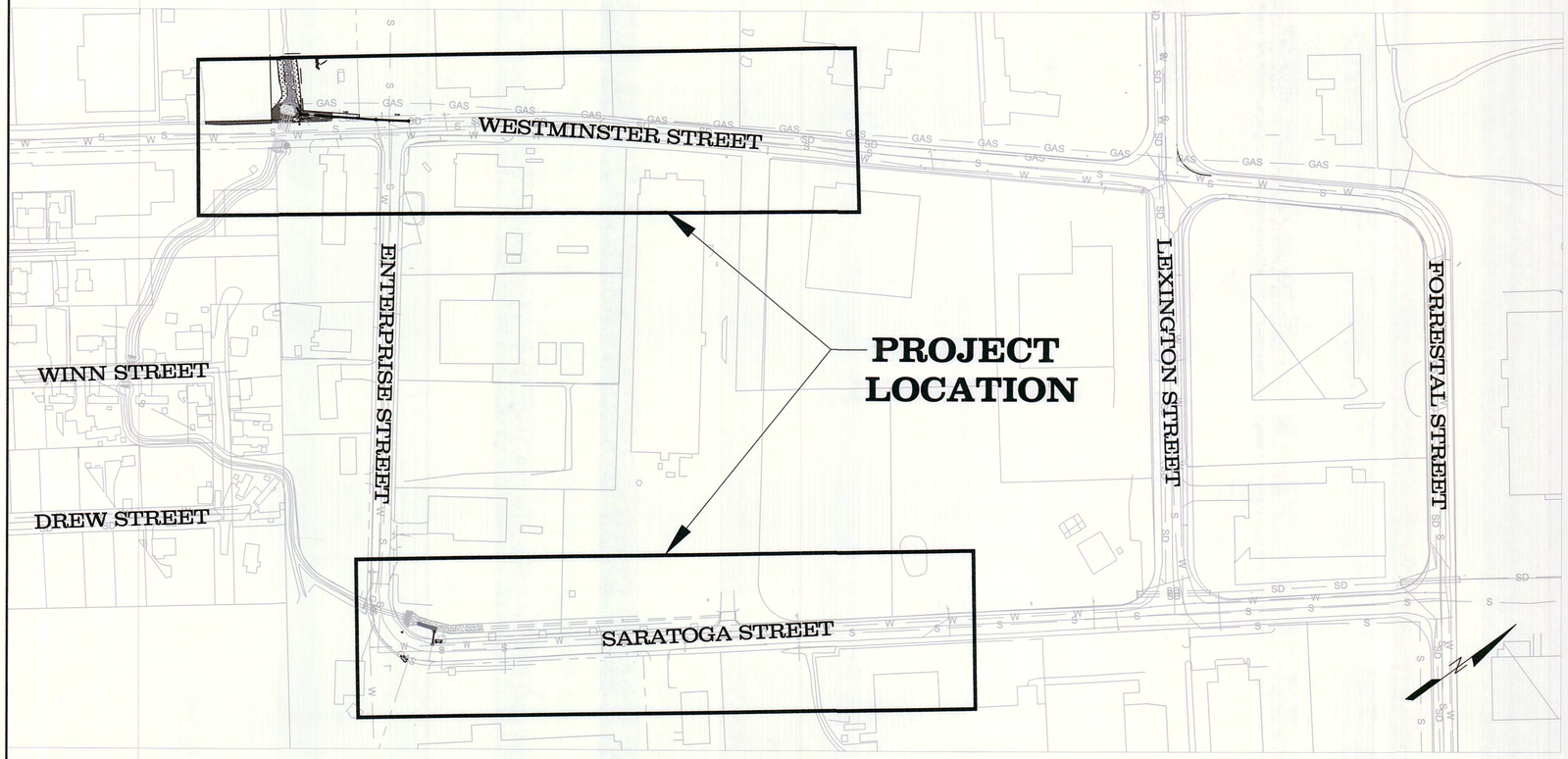


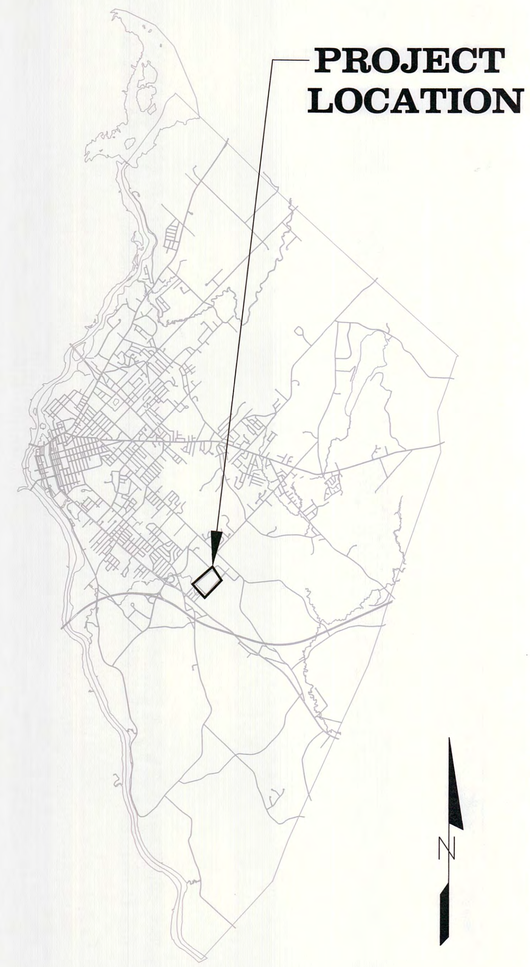


**INDEX OF SHEETS**


| | |
|---|---|
| TITLE SHEET | 1 |
| GENERAL NOTES | 2 |
| SITE PLAN | 3 |
| FILTER BASIN AND CHANNEL RESTORATION PLAN | 4 |
| STORM DRAIN PLAN AND PROFILE | 5 |
| LANDSCAPE PLAN | 6 |
| DETAILS | 7 |
| DETAILS | 8 |
| DETAILS | 9 |


# HART BROOK WATER QUALITY RESTORATION LEWISTON INDUSTRIAL PARK - PHASE I

2015

9-474-15

| Date | Drwn | Desc. | Rev. | Field Book/Data Collector Files |
|---|---|---|---|---|

HART BROOK WATER QUALITY RESTORATION
LEWISTON INDUSTRIAL PARK - PHASE 1

TITLE SHEET

Drwn JJE | Survey | Design JJE | Chk'd

City of LEWISTON Maine
DEPARTMENT OF PUBLIC WORKS
ENGINEERING DIVISION
103 Adams Avenue P.O. Box 479
Lewiston, Maine 04243-0479
Tel.207-513-3003 • FAX 207-784-5647

Scale
Plan --- Profile --- Horz. --- Vert.

File No. 9-474-15

Date 12/16/14

Sheet 1 OF 9

# GENERAL NOTES

1. THE CONTRACTOR IS REFERRED TO THE SPECIFICATIONS REGARDING COORDINATION WITH OTHERS, INCLUDING RESPONSIBILITIES AND RELATED COSTS. ALL UTILITY CONSTRUCTION IS SUBJECT TO INSPECTION BY UTILITY COMPANY PERSONNEL PRIOR TO BACKFILL OF TRENCHES.

2. BELOW GRADE UTILITY INFORMATION IS BASED UPON FIELD SURVEY, MDOT PLANS, CITY OF LEWISTON PLANS, CITY OF LEWISTON GIS WEBSITE, AND INFORMATION PROVIDED BY INDIVIDUAL UTILITY COMPANIES. LOCATIONS AND ELEVATIONS OF PUBLIC UTILITIES SHOWN ARE ONLY APPROXIMATE AND MAY NOT BE COMPLETE. PRIVATE UNDERGROUND UTILITIES SUCH AS, BUT NOT LIMITED TO, SEWER LINES, WATER LINES AND BURIED ELECTRICAL SERVICE ENTRANCES ARE NOT SHOWN. THE CONTRACTOR SHALL ASCERTAIN THE LOCATION AND SIZE OF EXISTING UTILITIES IN THE FIELD WITH THE RESPECTIVE UTILITY REPRESENTATIVE PRIOR TO COMMENCING WORK. REFER TO SPECIFICATION SECTION 30.4. THE CONTRACTOR IS SOLELY RESPONSIBLE FOR DETERMINING ACTUAL LOCATIONS AND ELEVATIONS OF ALL UTILITIES, INCLUDING SERVICES. SHOULD ANY UNCHARTED OR INCORRECTLY CHARTED UTILITIES BE FOUND, THE CONTRACTOR SHALL CONTACT THE ENGINEER IMMEDIATELY FOR DIRECTION BEFORE PROCEEDING FURTHER WITH THE WORK IN THIS AREA. ADDITIONAL TEST PITS, BEYOND THOSE SHOWN, MAY BE REQUIRED. UTILITY CONTACTS ARE AS FOLLOWS:

DIG SAFE:
1-888-344-7233

ELECTRICAL:
CENTRAL MAINE POWER
83 EDISON DRIVE
AUGUSTA, ME 04336
TEL. (207) 779-9118

GAS
UNITIL
1075 FOREST AVENUE
PORTLAND, ME 04104
TEL. (207) 797-8002

TELECOMMUNICATIONS:
OXFORD NETWORKS
491 LISBON STREET
LEWISTON, ME 04240
TEL. (207) 336-9911

TIME WARNER CABLE:
37 ALFRED PLOURDE PARKWAY
LEWISTON, ME 04240
TEL. 1-800-833-2253

FAIRPOINT COMMUNICATIONS:
521 E. MOREHEAD ST.
PORTLAND, ME 04101
TEL. 1-800-585-4466

WATER AND SEWER:
KEVIN GAGNE
LEWISTON PUBLIC WORKS DEPT.
WATER AND SEWER DIVISION
103 ADAMS AVENUE
LEWISTON, ME 04240
TEL. (207) 513-3003

3. THE CONTRACTOR IS HEREBY CAUTIONED THAT ALL SITE FEATURES SHOWN HEREON ARE BASED ON FIELD OBSERVATIONS BY THE SURVEYOR AND BY INFORMATION PROVIDED BY UTILITY COMPANIES. THE INFORMATION IS NOT TO BE RELIED ON AS BEING EXACT OR COMPLETE. THE CONTRACTOR SHALL CONTACT DIG SAFE (1-888-DIGSAFE) AT LEAST THREE (3) BUT NOT MORE THAN THIRTY (30) DAYS PRIOR TO COMMENCEMENT OF EXCAVATION OR DEMOLITION TO VERIFY HORIZONTAL AND VERTICAL LOCATION OF ALL UTILITIES.

4. CONTRACTOR SHALL BE AWARE THAT DIG SAFE ONLY NOTIFIES ITS "MEMBER" UTILITIES ABOUT THE DIG. WHEN NOTIFIED, DIG SAFE WILL ADVISE CONTRACTOR OF MEMBER UTILITIES IN THE AREA. CONTRACTOR IS RESPONSIBLE FOR IDENTIFYING AND CONTACTING NON-MEMBER UTILITIES DIRECTLY. NON-MEMBER UTILITIES MAY INCLUDE CITY WATER AND SEWER DISTRICTS AND SMALL LOCAL UTILITIES, AS WELL AS USG PUBLIC WORKS SYSTEMS.

5. CONTRACTORS SHALL BE RESPONSIBLE FOR COMPLIANCE WITH THE REQUIREMENTS OF 23 MRSA 3360-A. IT SHALL BE THE RESPONSIBILITY OF THE CONTRACTOR TO COORDINATE WITH THE APPROPRIATE UTILITIES TO OBTAIN AUTHORIZATION PRIOR TO RELOCATION OF ANY EXISTING UTILITIES WHICH CONFLICT WITH THE PROPOSED IMPROVEMENTS SHOWN ON THESE PLANS. IF A UTILITY CONFLICT ARISES, THE CONTRACTOR SHALL IMMEDIATELY NOTIFY THE CITY, THE MUNICIPALITY AND APPROPRIATE UTILITY COMPANY PRIOR TO PROCEEDING WITH ANY RELOCATION.

6. ALL EXISTING STORM DRAIN LINES ENCOUNTERED DURING CONSTRUCTION ARE TO REMAIN IN SERVICE. ANY EXISTING STORM DRAIN LINES OR CULVERTS DAMAGED DURING CONSTRUCTION SHALL BE REPAIRED BY THE CONTRACTOR AT NO ADDITIONAL COST TO THE CITY. ALL TEST PITS SHALL BE EXCAVATED PRIOR TO CONSTRUCTION LAYOUT AND RESULTS REPORTED TO ENGINEER FOR REVIEW FOR CONFORMANCE WITH PLANS.

7. THE CONTRACTOR MAY ENCOUNTER ASBESTOS CEMENT PIPE DURING PROSECUTION OF THE WORK. CONTRACTOR SHALL CONFORM TO ALL APPLICABLE PROVISIONS OF OSHA, USEPA, MDEP AND ALL OTHER FEDERAL, STATE AND LOCAL REGULATIONS WHEN HANDLING AND/OR DISPOSING OF ASBESTOS CEMENT PRODUCTS.

8. ALL STRUCTURES AND PIPELINES LOCATED ADJACENT TO THE TRENCH EXCAVATION SHALL BE PROTECTED AND FIRMLY SUPPORTED BY THE CONTRACTOR UNTIL THE TRENCH IS BACKFILLED. INJURY TO ANY SUCH STRUCTURES CAUSED BY, OR RESULTING FROM, THE CONTRACTOR'S OPERATIONS SHALL BE REPAIRED AT THE CONTRACTOR'S EXPENSE. ALL UTILITIES REQUIRING REPAIR, RELOCATION OR ADJUSTMENT AS A RESULT OF THE PROJECT SHALL BE COORDINATED THROUGH THE RESPECTIVE UTILITY.

9. ALL TEST PITS SHALL BE COMPLETED A MINIMUM OF TWO WEEKS PRIOR TO ORDERING THE ADJACENT STRUCTURES THE INFORMATION FROM THE TEST PITS SHALL BE SUBMITTED TO THE ENGINEER FOR REVIEW AND REVISION.

10. IN THOSE INSTANCES WHERE POWER OR TELEPHONE POLE SUPPORT IS REQUIRED, THE CONTRACTOR SHALL PROVIDE A MINIMUM 48-HOUR NOTIFICATION TO CMP OR FAIRPOINT, RESPECTIVELY. NO ADDITIONAL PAYMENT WILL BE PROVIDED FOR TEMPORARY BRACING OF UTILITIES

11. IN THOSE INSTANCE THAT THE WATERMAIN NEED TO BE RELOCATION THE CONTRACTOR SHALL COORDINATE WITH THE LEWISTON WATER AND SEWER DIVISION TO SCHEDULE THE WORK AFTER THE COMPLETION OF THE TEST PITS.

12. IN THOSE INSTANCE WHERE GAS SERVICES OR MAINS NEED TO BE RELOCATED THE CONTRACTOR SHALL COORDINATE WITH UNITIL AFTER THE COMPLETION OF THE TEST PIT TO SCHEDULE THE COMPLETION OF THE WORK.

13. CONTRACTOR SHALL INSTALL AND MAINTAIN TRAFFIC CONTROL SIGNS IN ACCORDANCE WITH THE LATEST EDITION OF THE MANUAL ON UNIFORM TRAFFIC CONTROL DEVICES (MUTCD).

14. THE CONTRACTOR IS RESPONSIBLE FOR MAINTAINING TRAFFIC FLOW AT ALL TIMES. THE CONTRACTOR IS REQUIRED TO SUBMIT A TRAFFIC CONTROL PLAN TO THE DEPARTMENT OF PUBLIC WORKS OR THEIR REPRESENTATIVE AT THE PRECONSTRUCTION MEETING. THE LEWISTON DEPARTMENT OF PUBLIC WORKS DIRECTOR OR HIS DESIGNATE SHALL BE NOTIFIED AT THE PRECONSTRUCTION MEETING OF ANY PLANNED STREET CLOSINGS OR DETOURS. ALL TRAFFIC CONTROL SHALL BE IN COMPLIANCE WITH THE MUTCD.

15. THE CONTRACTOR WILL BE RESPONSIBLE FOR OBTAINING ALL PERMITS. IT IS THE RESPONSIBILITY OF THE CONTRACTOR TO BE FAMILIAR WITH THE APPLICABLE PROVISIONS OF EACH PERMIT AS THEY APPLY TO THE WORK PRIOR TO BIDDING AND ABIDE BY THOSE PROVISIONS DURING CONSTRUCTION. THE CONTRACTOR SHALL POST ALL BONDS AS REQUIRED, PAY ALL FEES & PROVIDE PROOF OF INSURANCE AS NECESSARY FOR THIS WORK.

16. THE CITY SHALL BE RESPONSIBLE FOR OBTAINING ALL NECESSARY RIGHTS OF WAY AND EASEMENTS. THE CONTRACTOR SHALL VERIFY THAT THE NECESSARY EASEMENTS HAVE BEEN SECURED BY THE CITY. IT IS THE RESPONSIBILITY OF THE CONTRACTOR TO BE FAMILIAR WITH THE APPLICABLE PROVISIONS OF EACH EASEMENT AS THEY APPLY TO THE WORK PRIOR TO BIDDING AND ABIDE BY THOSE PROVISIONS DURING CONSTRUCTION. COPIES OF ALL RIGHTS-OF-WAY AND EASEMENTS ARE AVAILABLE FOR REVIEW AT THE LEWISTON PUBLIC WORKS DEPARTMENT.

17. THE CONTRACTOR SHALL BE RESPONSIBLE FOR THE LAYOUT OF ALL PROPOSED LINES AND GRADES AS SHOWN ON THE DRAWINGS. THE LAYOUT PLAN SHALL BE REVIEWED BY THE ENGINEER PRIOR TO CONSTRUCTION. THE HORIZONTAL ALIGNMENT OF THE NEW STORM DRAINS AND SANITARY SEWER MAY BE ADJUSTED IN THE FIELD SUBJECT TO PRIOR APPROVAL BY THE ENGINEER.

18. THE ENGINEER SHALL PROVIDE THE NECESSARY HORIZONTAL AND VERTICAL CONTROL POINTS FOR THE CONTRACTOR FOR WORK OUTSIDE THE STREET RIGHT-OF-WAY AND CONTRACTOR IS RESPONSIBLE FOR MAINTAINING THIS INFORMATION THROUGHOUT CONSTRUCTION. ALL ELEVATIONS REFER TO THE 1988 NATIONAL GEODETIC VERTICAL DATUM UNLESS OTHERWISE NOTED ON TEH PLANS. ORIENTATION IS GRID NORTH MAINE STATE PLANE COORDINATE SYSTEM. THE CONTRACTOR SHALL BE RESPONSIBLE TO VERIFY ALL ELEVATION REFERENCE INFORMATION PRIOR TO USE IN CONSTRUCTION.

19. TEMPORARY BENCH MARKS TO BE PROVIDED BY THE CITY PRIOR TO CONSTRUCTION OR AS SHOWN ON THE PLANS.

20. THE CONTRACTOR SHALL BE RESPONSIBLE FOR RESETTING ALL EXISTING PROPERTY MONUMENTATION THAT IS DISTURBED BY HIS OPERATIONS AT NO EXPENSE TO THE CITY. THIS WORK IS TO BE DONE BY A LAND SURVEYOR REGISTERED IN THE STATE OF MAINE.

21. THE CONTRACTOR SHALL BE RESPONSIBLE FOR SEDIMENT CONTROL AND THE PREVENTION OF EROSION. ALL DISTURBED EARTH SURFACES ARE TO BE STABILIZED IN THE SHORTEST PRACTICAL TIME AND TEMPORARY SEDIMENT AND EROSION CONTROL DEVICES SHALL BE EMPLOYED UNTIL SUCH TIME AS ADEQUATE SOIL STABILIZATION HAS BEEN ACHIEVED. TEMPORARY STORAGE OF EXCAVATED MATERIAL IS TO BE IN A MANNER THAT WILL MINIMIZE EROSION. MATERIALS AND METHODS USED FOR TEMPORARY SEDIMENT AND EROSION CONTROL SHALL BE AS SPECIFIED BY THE LATEST EDITION OF THE "MAINE EROSION AND SEDIMENT CONTROL HANDBOOK FOR CONSTRUCTION: BEST MANAGEMENT PRACTICES" PREPARED BY THE MAINE DEPARTMENT OF ENVIRONMENTAL PROTECTION.

22. COMPACTION TESTS SHALL BE PERFORMED IN ACCORDANCE WITH THE SPECIFICATIONS. ANY SETTLEMENT OCCURRING WITHIN ONE YEAR OF SUBSTANTIAL COMPLETION OF THE PROJECT WILL BE CORRECTED BY THE CONTRACTOR AT NO ADDITIONAL EXPENSE TO THE CITY.

23. OPEN TRENCHES IN THE ROADWAY SHALL BE ALLOWED AS DEFINED BY DIVISION 30.2. OPEN TRENCHES OUTSIDE OF THE RIGHT OF WAY MAY BE LEFT OPEN IF THE CONTRACTOR PROVIDES SAFE BARRICADING AND LIGHTS.

24. CONTRACTOR SHALL CONTROL DUST WITH APPROPRIATE DUST CONTROL MEASURES. CONTRACTOR SHALL NOT TRACK OR SPILL EARTH AND DEBRIS ON PUBLIC STREETS OUTSIDE THE PROJECT AREA. STREETS OPENED TO THE PUBLIC SHALL BE KEPT SWEPT AND FREE OF DEBRIS.

25. ALL ROAD SURFACES SHALL PITCH 1/4 INCH PER FOOT MINIMUM FROM CENTERLINE TO GUTTER UNLESS OTHERWISE NOTED. ALL VEGETATED AREAS THAT ARE EXCAVATED, FILLED OR OTHERWISE DISTURBED BY THE CONTRACTOR AND ARE NOT TO BE PAVED OR FILLED WITH RIP-RAP SHALL BE LOAMED, GRADED, LIMED, FERTILIZED, SEEDED AND MULCHED AT NO ADDITIONAL EXPENSE TO THE CITY.

26. THE CONTRACTOR SHALL COMPLY WITH ALL APPLICABLE REGULATIONS OF THE OCCUPATIONAL SAFETY AND HEALTH ADMINISTRATION (OSHA) AND ALL OTHER APPLICABLE LOCAL, STATE AND FEDERAL RUKES, REGULATIONS AND LAWS.

27. THE CONTRACTOR SHALL NOT HAVE ANY RIGHT OF PROPERTY IN ANY SUITABLE MATERIALS TAKEN FROM ANY EXCAVATION. SUITABLE EXCAVATED MATERIAL, AS APPROVED BY THE ENGINEER, MAY BE INCORPORATED IN THE PROJECT, WITH EXCESS MATERIAL DISPOSED OF AT A LOCATION APPROVED BY THE CITY. THESE PROVISIONS SHALL IN NO WAY RELIEVE THE CONTRACTOR OF HIS OBLIGATIONS TO PROPERLY DISPOSE OF AND REPLACE ANY MATERIAL DETERMINED BY THE ENGINEER TO BE UNSUITABLE FOR BACKFILLING. THE CONTRACTOR SHALL DISPOSE OF UNSUITABLE AND EXCESS MATERIAL IN ACCORDANCE WITH THE APPLICABLE SECTIONS OF THE CONTRACT DOCUMENTS.

28. RIGHT-OF-WAY LOCATION IS APPROXIMATE ONLY AND TAKEN FROM CITY OF LEWISTON GIS INFORMATION.

29. THE CONTRACTOR IS TO TAKE SPECIAL CARE NOT TO DAMAGE TREES WITHIN THE CONSTRUCTION AREA UNLESS THEY ARE NOTED TO BE REMOVED.

30. CUT AND CAP/PLUG BOTH ENDS OF ALL SEWER AND STORM PIPES TO BE ABANDONED WITH BRICKS AND MORTAR, INCLUDING IN MH'S & CB'S IF APPLICABLE. REMOVE ANY EXISTING STORM SEWER AND SANITARY SEWER SYSTEMS WHERE IN CONFLICT WITH NEW UTILITIES. ABANDON ALL PIPES ENTERING STORM SEWER AND SANITARY SEWER STRUCTURES TO BE REMOVED UNLESS OTHERWISE NOTED. CUT AND CAP ENDS OF WATER MAINS TO BE ABANDONED WITH SOLID MJ CAPS AND GRIP RINGS.

31. EXISTING STORM MANHOLES OR CATCH BASINS NOT TO REMAIN IN SERVICE SHALL BE REMOVED BY THE CONTRACTOR.

32. PROVIDE 2" RIGID INSULATION OVER WATER AND SEWER MAINS AND SERVICES WHEN COVER IS LESS THAN 4 FEET AND WHERE DIRECTED BY THE ENGINEER. CONTRACTOR SHALL SUPPLY INSULATION.

33. MINOR ADJUSTMENTS TO THE ALIGNMENT OF PROPOSED UTILITIES SHALL BE ALLOWED TO ACCOMMODATE EXISTING UTILITIES WHERE APPROPRIATE AS APPROVED BY THE ENGINEER.

34. A MINIMUM VERTICAL OR HORIZONTAL SEPARATION OF 6 INCHES BETWEEN THE WATER LINES (INCLUDING SERVICES) AND STORM DRAINAGE PIPES AND STRUCTURES, SHALL BE MAINTAINED. 2" RIGID INSULATION SHALL BE INSTALLED WHEN SEPARATION IS LESS THAN 18 INCHES.

35. EXISTING SIGNS THAT ARE IMPACTED BY THIS PROJECT SHALL BE RESET IN ACCORDANCE WITH M.U.T.C.D.

36. THE INVERTS INDICATED ON THE PLAN AND PROFILE SHEETS ARE TO THE INSIDE FACE OF THE MANHOLE.

37. DEWATERING EFFORTS FROM SANITARY OR COMBINED SEWERS SHALL NOT BE DISCHARGED TO THE STORMDRAIN. DEWATERING EFFORTS FROM STORMWATER SHALL NOT BE DISCHARGED TO THE SEWER OR COMBINED SYSTEM.

38. STORM DRAIN INVERTS FOR CROSS STREET CONNECTIONS SHALL BE BASED ON ELEVATIONS OF EXISTING UTILITIES AS DETERMINED IN THE FIELD. CONTRACTOR SHALL COORDINATE PROPOSED STORM DRAIN INVERTS WITH THE ENGINEER.

39. CONTRACTOR TO VERIFY TYPE (BRICK OR PRECAST CONCRETE) AND CONDITION OF ALL SMH'S AND DMH'S IMPACTED AS PART OF THIS WORK. CONTRACTOR TO MAINTAIN THE INTEGRITY OF ALL STRUCTURES TO BE REUSED. DAMAGE TO EXISTING STRUCTURES SHALL BE REPAIRED AT CONTRACTORS EXPENSE.

40. CONTRACTOR TO REPLACE OR RESET ALL CURBING UPON COMPLETION OF UNDERGROUND UTILITY WORK.

41. CONTRACTOR TO RESTORE SIDEWALKS AND DRIVEWAYS IMPACTED BY CONSTRUCTION.

42. CONTRACTOR TO REGRADE AND REPLANT ESPLANADE AREAS IMPACTED BY CONSTRUCTION.

43. CONTRACTOR TO SAWCUT PAVEMENT AS NECESSARY TO INSTALL UTILITY IMPROVEMENTS. CONTRACTOR SHALL BE RESPONSIBLE FOR PREPARING AREAS WHERE THE EXISTING PAVEMENT WAS REMOVED FOR PAVING, INCLUDING GRADING AND ADDITIONAL SAWCUTTING AS REQUIRED BY THE ENGINEER.

44. CONTRACTOR SHALL BE RESPONSIBLE FOR DESIGNING, FURNISHING, INSTALLING AND MONITORING ANY SHORING, BRACING OR OTHER EXCAVATION SUPPORT THAT MAY BE REQUIRED TO PROTECT STRUCTURES, UTILITIES, SIDEWALKS, PAVEMENT OR OTHER FACILITIES THAT COULD BE DAMAGED BY SETTLEMENT, LATERAL MOVEMENTS, UNDERMINING, WASHOUT OR OTHER HAZARDS THAT COULD DEVELOP DURING EXCAVATION SUPPORT AND PROTECTION OPERATIONS.

45. CONTRACTOR SHALL VISIT THE SITE AND FAMILIARIZE HIM OR HERSELF WITH ALL CONDITIONS AFFECTING THE PROPOSED WORK AND SHALL MAKE PROVISIONS AS TO THE COST THEREOF. CONTRACTOR SHALL BE RESPONSIBLE FOR FAMILIARIZING HIM OR HERSELF WITH ALL CONTRACT DOCUMENTS, FIELD CONDITIONS AND DIMENSIONS AND CONFIRMING THAT THE WORK MAY BE ACCOMPLISHED AS SHOWN PRIOR TO PROCEEDING WITH CONSTRUCTION. ANY DISCREPANCIES SHALL BE BROUGHT TO THE ATTENTION OF THE ENGINEER PRIOR TO THE COMMENCEMENT OF WORK.

46. INSTALL ALL EQUIPMENT AND MATERIALS IN ACCORDANCE WITH MANUFACTURER'S RECOMMENDATIONS AND OWNER'S REQUIREMENTS UNLESS SPECIFICALLY OTHERWISE INDICATED OR WHERE LOCAL CODES OR REGULATIONS TAKE PRECEDENCE.

47. CONTRACTOR SHALL CLEAN AND REMOVE DEBRIS AND SEDIMENT DEPOSITED ON PUBLIC STREETS, SIDEWALKS, ADJACENT AREAS, OR OTHER PUBLIC WAYS DUE TO CONSTRUCTION DAILY.

48. THE CONTRACTOR SHALL TAKE FULL RESPONSIBILITY FOR ANY CHANGES AND DEVIATION OF APPROVED PLANS NOT AUTHORIZED BY THE ENGINEER AND/OR OWNER.

49. DETAILS ARE INTENDED TO SHOW END RESULT OF DESIGN. ANY MODIFICATION TO SUIT FIELD DIMENSION AND CONDITION SHALL BE SUBMITTED TO THE ENGINEER FOR REVIEW AND APPROVAL PRIOR TO ANY WORK.

50. BEFORE THE FINAL ACCEPTANCE OF THE PROJECT, THE CONTRACTOR SHALL REMOVE ALL EQUIPMENT AND MATERIALS, REPAIR OR REPLACE PRIVATE OR PUBLIC PROPERTY WHICH MAY HAVE BEEN DAMAGED OR DESTROYED DURING CONSTRUCTION AS DETERMINED BY THE CITY, CLEAN THE AREAS WITHIN AND ADJACENT TO THE PROJECT WHICH HAVE BEEN OBSTRUCTED BY HIS/HER OPERATIONS, AND LEAVE THE PROJECT AREA NEAT AND PRESENTABLE.

51. THE CONTRACT WORK TO BE PERFORMED ON THIS PROJECT CONSISTS OF FURNISHING ALL REQUIRED LABOR, MATERIALS, EQUIPMENT, IMPLEMENTS, PARTS AND SUPPLIES NECESSARY FOR, OR APPURTENANT TO, THE INSTALLATION OF CONSTRUCTION IMPROVEMENTS IN ACCORDANCE WITH THESE DRAWINGS AND AS FURTHER ELABORATED IN ANY ACCOMPANYING SPECIFICATIONS.

52. THE WORK SHALL BE PERFORMED IN A THOROUGH WORKMANLIKE MANNER. ANY REFERENCE TO A SPECIFICATION OR DESIGNATION OF THE AMERICAN SOCIETY FOR TESTING MATERIALS, FEDERAL SPECIFICATIONS, OR OTHER STANDARDS, CODES OR ORDERS, REFERS TO THE MOST RECENT OR LATEST SPECIFICATION OR DESIGNATION.

53. THE CONTRACTOR SHALL GUARANTEE THE FAITHFUL REMEDY OF ANY DEFECTS DUE TO FAULTY MATERIALS OR WORKMANSHIP AND GUARANTEES PAYMENT FOR ANY RESULTING DAMAGE WHICH SHALL APPEAR WITHIN A PERIOD OF ONE (1) YEAR FROM THE DATE OF SUBSTANTIAL COMPLETION OF THE PROJECT.

54. THE CONTRACTOR SHALL PERFORM ALL WORK WITHIN THE RIGHT OF WAY UNLESS NOTED OTHERWISE ON THE PLANS. THE CONTRACTOR SHALL NOT USE PRIVATE PROPERTY FOR STOCK PILING MATERIALS OR PARKING EQUIPMENT OR VEHICLES WITHOUT WRITTEN CONSENT FROM THE PROPERTY OWNER. ANY DAMAGE DONE TO PRIVATE PROPERTY RESULTING FROM THESE ACTIVITIES SHALL BE THE RESPONSIBLITY OF THE CONTRACTOR TO REPAIR AT NO ADDITIONAL COST TO THE CITY.

| VOID-FILLED RIPRAP | | |
|---|---|---|
| APPROXIMATE PROPORTIONS (LOAD BUCKETS) | MATERIAL TYPE | MATERIAL DESCRIPTION |
| 6 | RIPRAP | D50 = 12" (SEE TABLE BELOW) |
| 2 | VOID-FILLED MATERIAL (COBBLE) | 2 TO 5-INCH COBBLE (ROUND WASHED RIVER ROCK THAT IS WELL-GRADED) |
| 2 | VOID-FILLED MATERIAL (GRAVEL) | AGGREGATE SUBBASE MATERAIL/MEDOT "TYPE D" GRAVEL (SEE SECTION 50.17 FOR GRADATION) |
| 1 | VOID-FILLED MATERIAL (CRUSHED ROCK) | CRUSHED ROCK (AGGREGATE BASE/MEDOT "TYPE A" CRUSHED ROCK) |
| TOP LAYER FOR EXPOSED VOID-FILLED RIPRAP | TOP DRESSING | ADDITIONAL MIXTURE OF COBBLE SHALL BE MIXED IN ON THE SURFACE OF EXPOSED VOID-FILLED RIPRAP PRIOR TO COMPACTION OF THE VOID-FILLED RIPRAP. COBBLES SHALL BE FULLY EMBEDDED INTO THE MASS OF VOID-FILLED RIPRAP |

55. VOID-FILLED RIPRAP: WHERE "VOID-FILLED RIPRAP" IS DESIGNATED ON THE CONTRACT PLANS, RIPRAP SHALL BE MIXED WITH THE MATERIALS AND ASSOCIATED PROPORTIONS LISTED IN THE TABLE ABOVE TO FILL THE VOIDS OF THE RIPRAP.

NOTE: MIX PROPORTIONS AND MATERIAL GRADATIONS ARE APPROXIMATE AND ARE SUBJECT TO ADJUSTMENT BY THE ENGINEER. NO ADJUSTMENT IN UNIT PRICE FOR VOID-FILLED RIPRAP WILL BE ALLOWED BASED ON MODIFICATIONS TO THE MIX PROPORTIONS.

THE RIPRAP AND VOID-FILLED MATERIAL SHALL BE THOROUGHLY MIXED PRIOR TO PLACEMENT AND SHALL BE INSTALLED AND COMPACTED SO THAT DENSE, INTERLOCKED LAYER OF RIPRAP AND VOID FILLED MATERIAL IS PROVIDED WITH RIPRAP VOIDS COMPLETELY FILLED.

THE RIPRAP USED SHALL HAVE AN APPROXIMATE D50 (MEAN PARTICLE SIZE) OF 12 INCHES. THE CONTROL OF GRADATION SHALL BE DONE BY VISUAL INSPECTION AND SHALL CONFORM TO THE FOLLOWING GRADATION:

| CLASSIFICATION AND GRADATION OF RIPRAP | | |
|---|---|---|
| RIPRAP D50 | % SMALLER THAN GIVEN SIZE BY WEIGHT | INTERMEDIATE ROCK DIMENSION (INCHES) |
| 12" | 70-100 | 21 |
| | 50-70 | 18 |
| | 35-50 | 12 |
| | 2-10 | 4 |

## ABBREVIATIONS

| | |
|---|---|
| W | WATER |
| S | SANITARY SEWER |
| CS | COMBINED SEWER & DRAIN |
| D | STORM DRAIN |
| G | GAS |
| E | UNDERGROUND ELECTRIC |
| T | TELEPHONE |
| CATV | UNDERGROUND CABLE TELEVISION |
| AC | ASBESTOS CEMENT |
| AK | AKRON (VITRIFIED CLAY) |
| CI | CAST IRON |
| DI | DUCTILE IRON |
| RC(P) | REINFORCED CONCRETE (PIPE) |
| PVC | POLYVINYL CHLORIDE |
| CL | CEMENT LINED |
| VC | VITRIFIED CLAY |
| INV. IN | INVERT ELEVATION IN |
| INV. OUT | INVERT ELEVATION OUT |
| SMH | SEWER MANHOLE |
| MH | MANHOLE |
| DMH | DRAIN MANHOLE |
| GV | GATE VALVE |
| HDPE | HIGH DENSITY POLYETHYLENE |
| PE | POLYETHYLENE |
| MB | MAIL BOX |
| CB | CATCH BASIN |
| CM(P) | CORRUGATED METAL (PIPE) |
| NPV | NO PIPES VISIBLE |
| TBM | TEMPORARY BENCH MARK |
| EX. | EXISTING |
| CB-N/S | CATCH BASIN CONNECTION |
| M/L | MAIN LINE |
| GC | GRANITE CURBING |
| ASPH C | ASPHALT CURBING |

## LEGEND

NOTE: NOT ALL SYMBOLS SHOWN HEREUNDER WILL BE SEEN ON EACH SHEET OF THIS SET

| EXISTING | DESCRIPTION |
|---|---|
| | ABUTTER LINE/R.O.W. |
| | EASEMENT |
| | CENTERLINE |
| | MONUMENT |
| | IRON PIPE/ROD |
| | DRILLHOLE |
| | ZONE LINE |
| | ZONE LINE ON PL |
| | BENCHMARK |
| | SURVEY CONTROL |
| TP-1 | TEST PIT |
| MW-2 | MONITORING WELL |
| B-3 | BORING |
| | BUILDING |
| | WETLANDS |
| | UPLAND |
| | EDGE WETLAND |
| | SIGN |
| | STREAM |
| | ROCK OUTCROP |
| | EDGE PAVEMENT |
| | EDGE CONCRETE |
| | PAVEMENT PAINT |
| | GRAVEL ROAD |
| | CURBLINE |
| | EDGE WATER |
| | TREELINE |
| --122-- --120-- | CONTOURS |
| ×30.20 | SPOT GRADE |
| | CHAIN LINK FENCE |
| | WIRE FENCE |
| | STOCKADE FENCE |
| | STONE WALL |
| | RETAINING WALL |
| | DECIDUOUS TREE |
| | CONIFEROUS TREE |
| | GUARDRAIL |
| | BOLLARD |
| | RAILROAD |
| G | GAS |
| GV | GAS GATE VALVE |
| GM | GAS METER |
| W | WATER |
| WV | WATER GATE VALVE |
| | WATER SHUT OFF |
| | HYDRANT |
| S | SEWER |
| S | SEWER MH |
| SD | STORM DRAIN |
| UD | UNDERDRAIN |
| | CATCH BASIN |
| D | DRAINAGE MH |
| SD | CULVERT |
| OHU | OVERHEAD UTILITY |
| UGU | UNDERGROUND UTILITY |
| T | TRANSFORMER PAD |
| E | ELECTRICAL MANHOLE |
| T | TELEPHONE MANHOLE |
| | LIGHT POLE/WALL |
| | UTILITY POLE |
| | GUY |

| Date | Drwn | Desc. | Rev. | Field Book/Data Collector Files |
|---|---|---|---|---|
| | | | | |

**HART BROOK WATER QUALITY RESTORATION**
**LEWISTON INDUSTRIAL PARK - PHASE 1**

GENERAL NOTES

Drwn JJE | Survey | Design JJE | Chk'd

City of LEWISTON Maine
DEPARTMENT OF PUBLIC WORKS
ENGINEERING DIVISION
103 Adams Avenue P.O. Box 479
Lewiston, Maine 04243-0479
Tel.207-513-3003 FAX#207-784-5647

Scale
Plan 1"=20'
Profile 1"=20' Horz. 1"=2' Vert.

File No. 9-474-15

Date 12/16/14

Sheet 2 OF 9

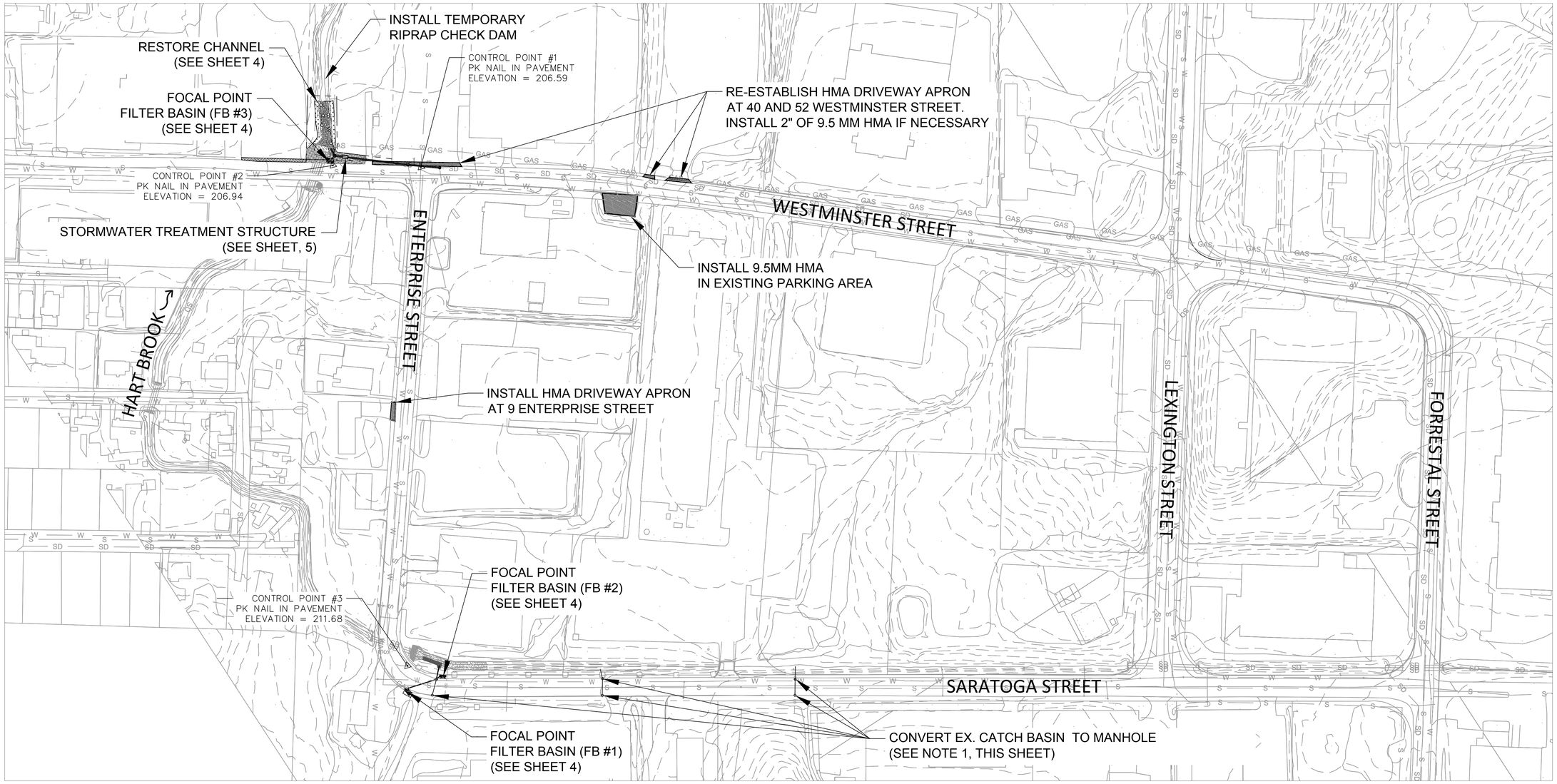


# SITE PLAN

SCALE: 1"=40'

**NOTES:**

1. CONVERT CATCH BASIN TO MANHOLE BY PLUGGING EXISTING PIPES AND RAISING RIM TO ELIMINATE DEPRESSED TRANSITION IN STREET.
2. WHERE SHOWN ON PLANS, RE-ESTABLISH DRIVEWAY APRON BY REMOVING ACCUMULATED SEDIMENT AND INSTALLING 2" OF 9.5MM HOT MIX ASPHALT IF NECESSARY. CONTAIN WORK FROM EDGE OF ROAD TO RIGHT-OF-WAY.

## EROSION CONTROL NOTES

1. THE CONTRACTOR SHALL BE RESPONSIBLE FOR THE PREVENTION OF EROSION. ALL DISTURBED EARTH SURFACES ARE TO BE STABILIZED IN THE SHORTEST PRACTICAL TIME AND TEMPORARY EROSION CONTROL DEVICES SHALL BE EMPLOYED UNTIL SUCH TIME AS ADEQUATE SOIL STABILIZATION HAS BEEN ACHIEVED. TEMPORARY STORAGE OF EXCAVATED MATERIAL IS TO BE IN A MANNER THAT WILL MINIMIZE EROSION. MATERIALS AND METHODS USED FOR TEMPORARY EROSION CONTROL SHALL BE AS SPECIFIED BY THE LATEST EDITION OF THE "MAINE EROSION AND SEDIMENT CONTROL HANDBOOK FOR CONSTRUCTION: BEST MANAGEMENT PRACTICES" PREPARED BY THE MAINE DEPARTMENT OF ENVIRONMENTAL PROTECTION.
2. THE CONTRACTOR SHALL SUBMIT AN EROSION CONTROL PLAN FOR APPROVAL BY THE ENGINEER. ADDITIONAL MEASURES MAY BE REQUIRED DUE TO SITE OR WEATHER CONDITIONS. THE ENGINEER MAY DIRECT THE CONTRACTOR TO IMPLEMENT ADDITIONAL MEASURES.
3. 4" LOAM SHALL BE PLACED ON ALL DISTURBED AREAS EXCEPT SLOPES BEHIND GUARDRAILS OR UNLESS OTHERWISE SPECIFIED ON THE PLANS. ACTUAL PLACEMENT OF THE LOAM SHALL BE AS DESIGNATED BY THE ENGINEER.
4. ALL SLOPES SHALL BE SEEDED WITH SEEDING METHOD NO. 1, 2 OR 3. UNLESS OTHERWISE NOTED, SEEDING METHOD NO. 1 SHALL BE UTILIZED ON ALL LAWNS AND DEVELOPED AREAS; SEEDING METHOD NO. 2 SHALL BE UTILIZED AT ALL STREAM LOCATIONS, 100 FEET RIGHT AND LEFT OF THE STREAM AND ON ALL NON-GUARDRAIL FORESLOPES, FROM THE EDGE OF SHOULDER TO THE DITCH LINE OR TOE OF FILL; SEEDING METHOD NO. 3 SHALL BE UTILIZED ON ALL GUARDRAIL FRONT SLOPES. WETLAND SEED MIX SHALL BE USED ON ON THE HART BROOK CHANNEL BANKS.
5. MULCH SHALL BE APPLIED IN AREAS SEEDED BY SEEDING METHODS NO. 1, 2 AND 3 EXCEPT WHERE EROSION CONTROL BLANKET IS SPECIFIED.
6. ALL TEMPORARY AND PERMANENT EROSION CONTROL DEVICES SHALL BE INSTALLED IN ACCORDANCE WITH THE MAINE DEPARTMENT OF TRANSPORTATION BEST MANAGEMENT PRACTICES.
7. TEMPORARY AND PERMANENT STONE CHECK DAMS WILL BE INSTALLED IN ACCORDANCE WITH THE MDOT BEST MANAGEMENT PRACTICES. STONE CHECK DAMS WILL BE SPACED APPROXIMATELY 100 FEET FOR DITCH GRADES LESS THAN 3% AND SPACED APPROXIMATELY 50 FEET FOR DITCH GRADES STEEPER THAN 5%. SEE MDOT BMP'S FOR FURTHER DETAILS.
8. ALL EROSION CONTROL GEOTEXTILE SHALL BE MIRAFI 140-N OR APPROVED EQUIVALENT FOR RIPRAP DITCHES.
9. A TEMPORARY EROSION CONTROL BLANKET SHALL BE INSTALLED IN ALL DITCHES AND 2:1 SLOPES FROM TOP TO TOE OF SLOPE. LOAM AND SEED SHALL BE PLACED PRIOR TO THE INSTALLATION OF THE EROSION CONTROL BLANKET. LIMITS OF THE EROSION CONTROL BLANKET IN DITCHES SHALL BE 6' WIDE OR AS DESIGNATED BY THE ENGINEER.
10. A DOUBLE ROW OF SILT FENCE PROTECTION SHALL BE INSTALLED AT ALL STREAM LOCATIONS AND OPEN WATER WETLANDS.

| Rev. | Desc. | Drwn | Date |
|---|---|---|---|
| | | | |

Field Book/Data Collector Files

**HART BROOK WATER QUALITY RESTORATION**
**LEWISTON INDUSTRIAL PARK - PHASE 1**

SITE PLAN

Drwn JJE | Survey | Design JJE | Chk'd

City of LEWISTON Maine
DEPARTMENT OF PUBLIC WORKS
ENGINEERING DIVISION
103 Adams Avenue P.O. Box 479
Lewiston, Maine 04243-0479
Tel.207-513-3003 *Fax207-784-5647

Scale: Plan 1"=100' | Profile Horz. Vert.

File No. 9-474-15

Date 12/17/14

Sheet 3 OF 9

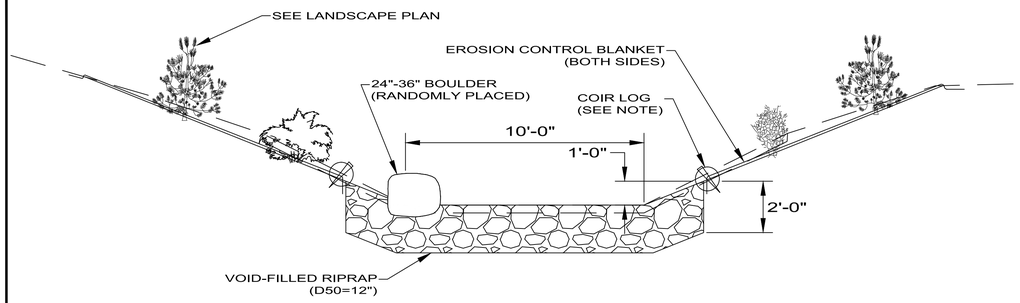


## HART BROOK TYPICAL SECTION @ WESTMINSTER ST.

SCALE: 1"=3'

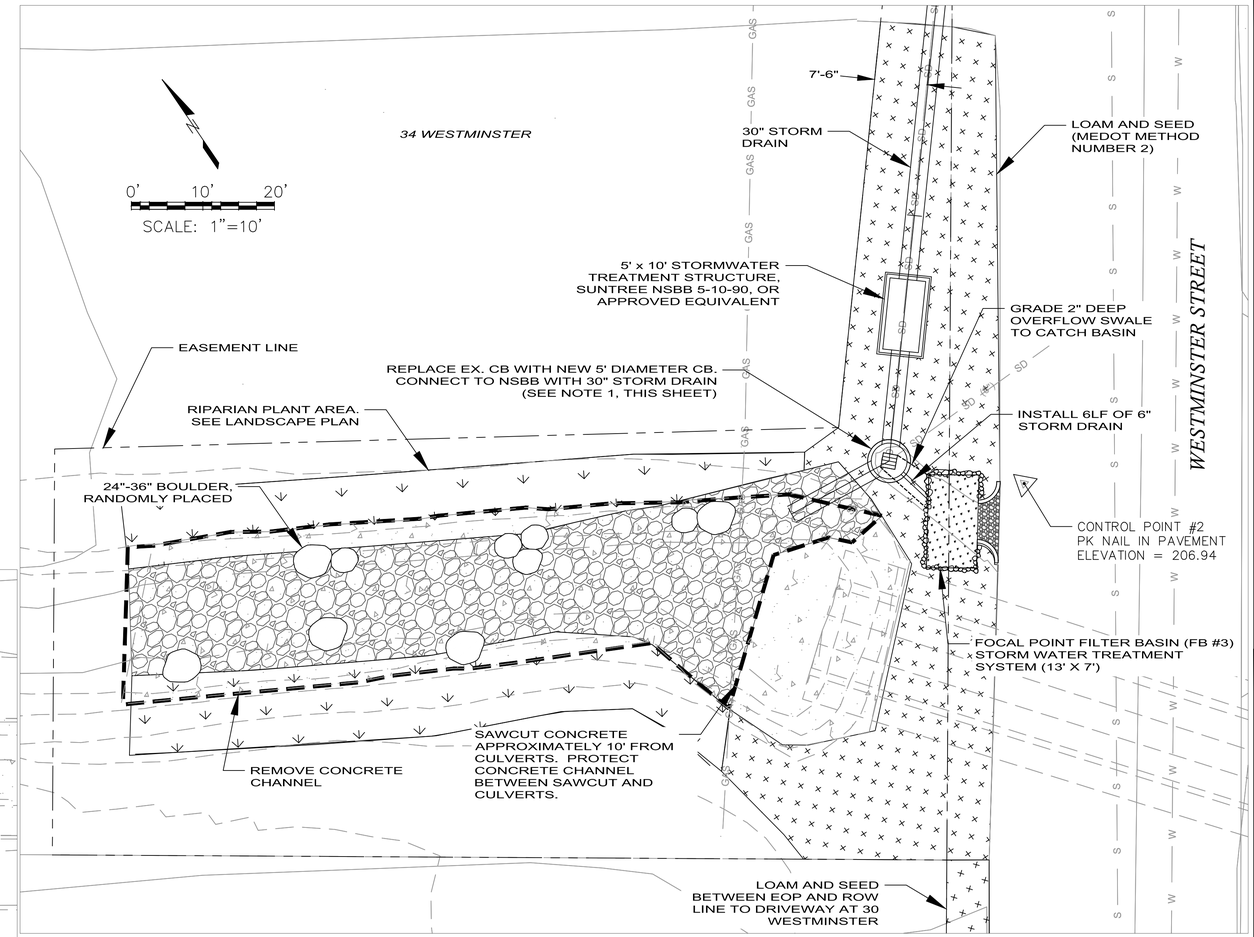


## HART BROOK CHANNEL RESTORATION AND FILTER BASIN PLAN

SCALE: 1"=10'

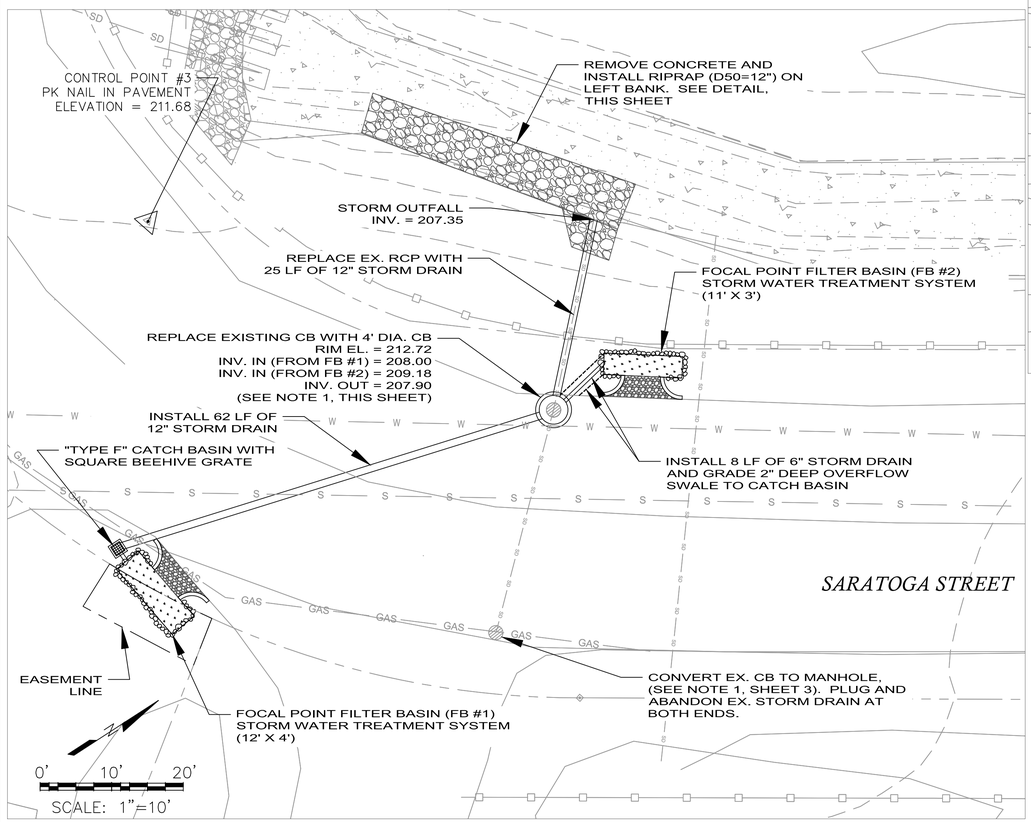


## SARATOGA STREET FILTER BASIN PLAN

SCALE: 1"=10'

NOTES:
1. COIR LOG SHALL BE 12" PREMIUM COIR LOGS MANUFACTURED BY EAST COAST EROSION CONTROL OR APPROVED EQUIVALENT.

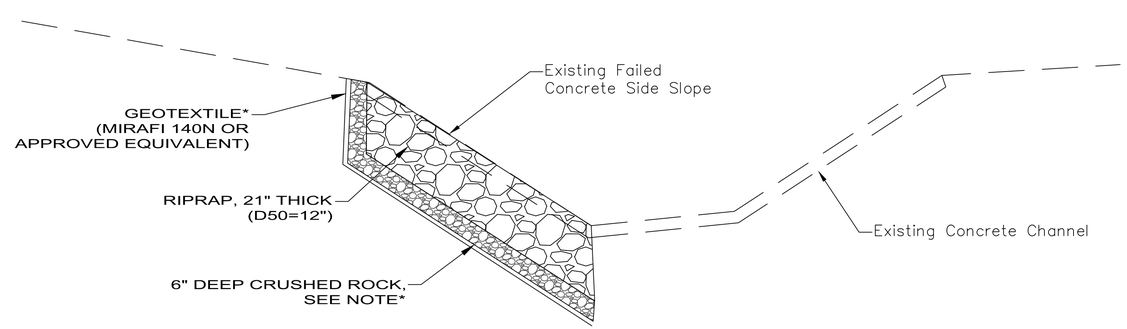


*CRUSHED ROCK AND GEOTEXTILE WILL BE CONSIDERED INCIDENTAL TO RIPRAP

## HART BROOK TYPICAL SECTION @ SARATOGA ST.

SCALE: 1"=2'

| Date | Drwn | Desc. | Rev. | Field Book/Data Collector Files |
|---|---|---|---|---|
| | | | | |

**HART BROOK WATER QUALITY RESTORATION**
**LEWISTON INDUSTRIAL PARK - PHASE 1**
FILTER BASIN AND
CHANNEL RESTORATION PLAN

Drwn JJE | Survey | Design JJE | Chk'd

City of LEWISTON Maine
DEPARTMENT OF PUBLIC WORKS
ENGINEERING DIVISION
103 Adams Avenue P.O. Box 479
Lewiston, Maine 04243-0479
tel:207-513-3003 fax:207-784-5647

Scale
Plan --- Profile --- Horz. --- Vert.

File No. 9-474-15

Date 12/17/14

Sheet 4 OF 9

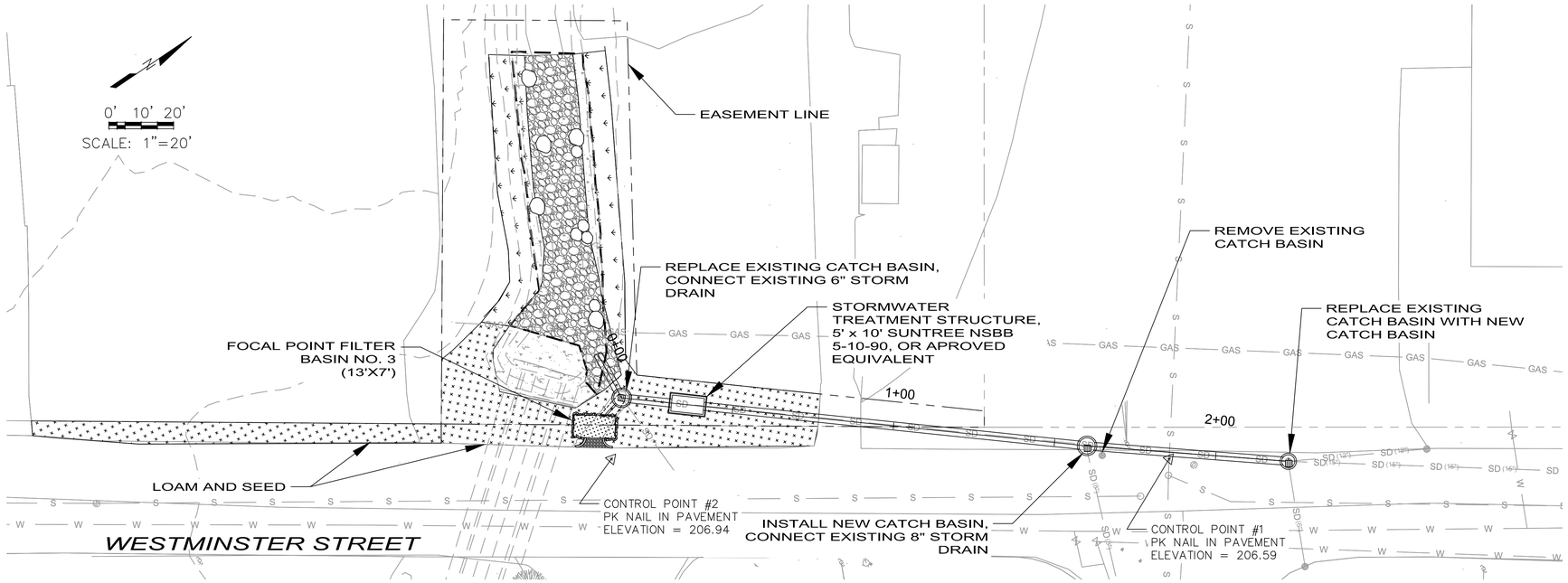


PLAN

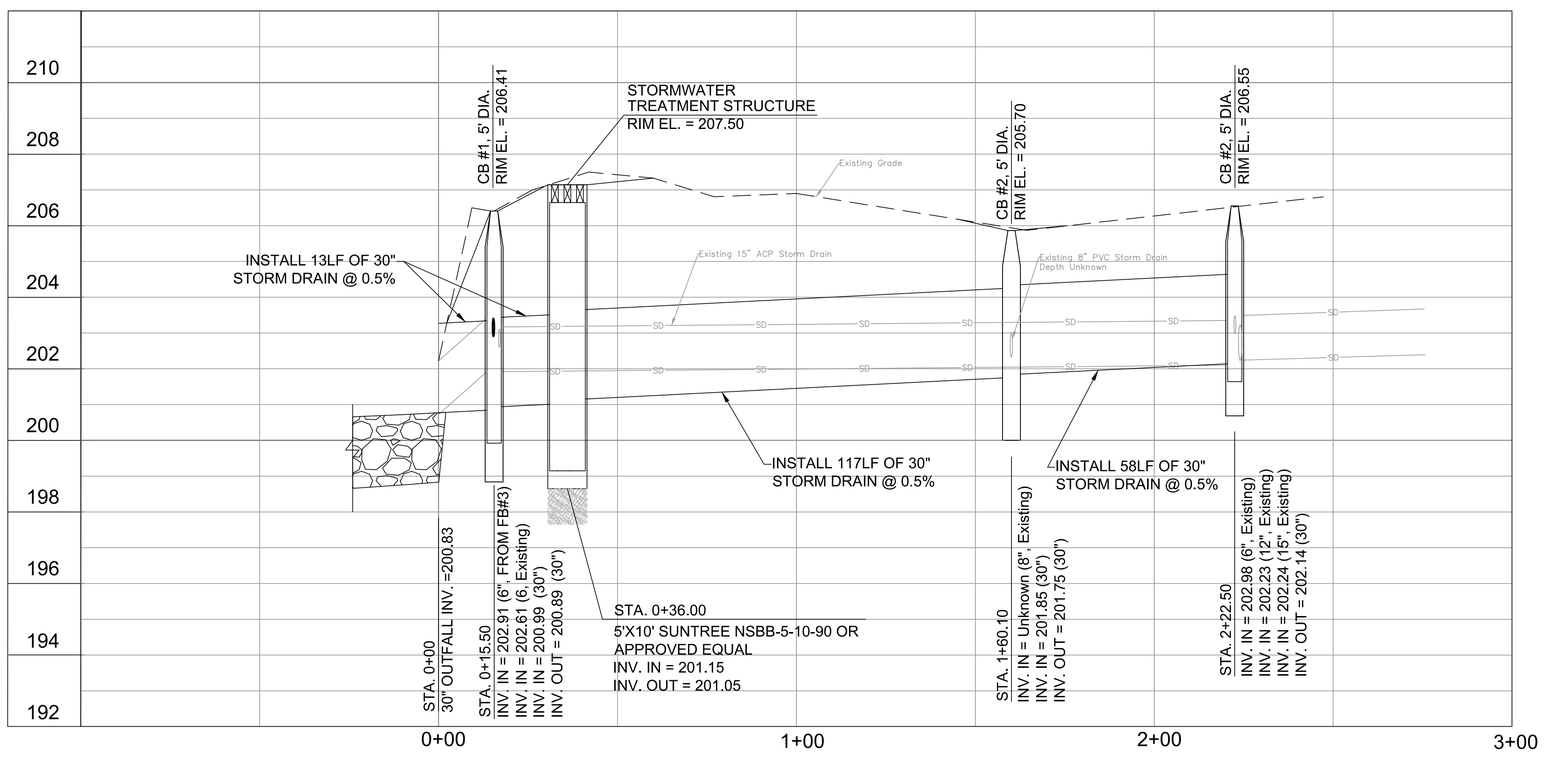


PROFILE

SCALE: HORIZ. 1"=20'
VERT. 1"=2'

| Rev. | Desc. | Drwn | Date |
|---|---|---|---|
| | | | |

Field Book/Data Collector Files

**HART BROOK WATER QUALITY RESTORATION**
**LEWISTON INDUSTRIAL PARK - PHASE 1**
STORM DRAIN
PLAN AND PROFILE

Drwn JJE | Survey | Design JJE | Chk'd

City of LEWISTON Maine
DEPARTMENT OF PUBLIC WORKS
ENGINEERING DIVISION
103 Adams Avenue P.O. Box 479
Lewiston, Maine 04243-0479
Tel 207-513-3003 *Fax 207-784-5647

Scale
Plan 1"=20'
Profile 1"=20' Horz. 1"=2' Vert.

File No. 9-474-15

Date 12/17/14

Sheet 5 OF 9

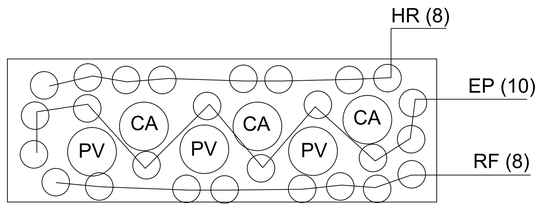


FILTER BASIN #1

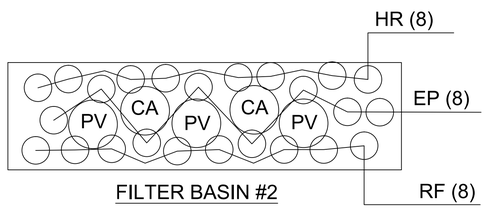


FILTER BASIN #2

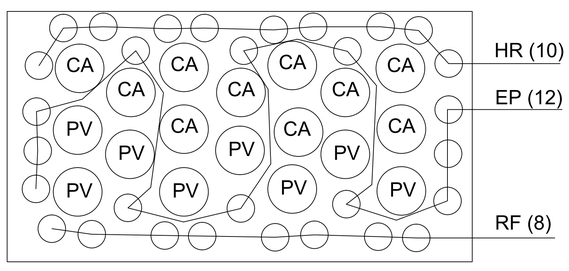


FILTER BASIN #3

## FILTER BASIN LANDSCAPE PLAN

SCALE: 1"=2'

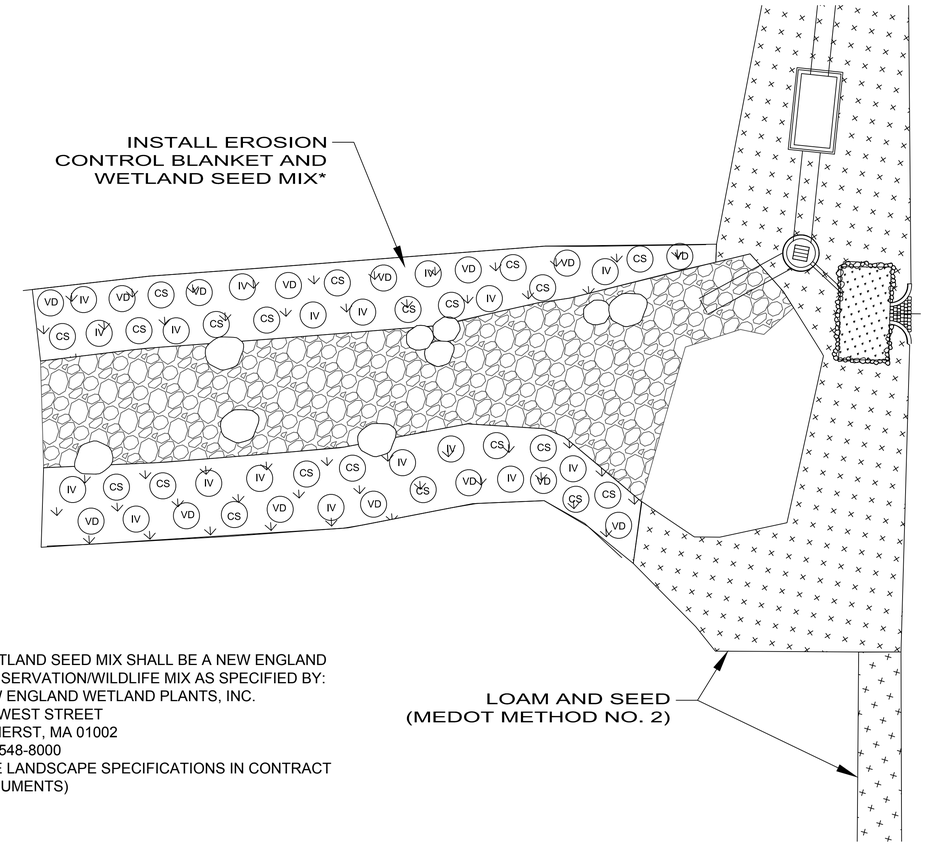


*WETLAND SEED MIX SHALL BE A NEW ENGLAND CONSERVATION/WILDLIFE MIX AS SPECIFIED BY:
NEW ENGLAND WETLAND PLANTS, INC.
820 WEST STREET
AMHERST, MA 01002
413-548-8000
(SEE LANDSCAPE SPECIFICATIONS IN CONTRACT DOCUMENTS)

## HART BROOK CHANNEL RESTORATION LANDSCAPE PLAN

SCALE: 1"=10'

### HART BROOK PLANTING LIST

| KEY | BOTANICAL NAME | COMMON NAME | SIZE | QUANTITY |
|---|---|---|---|---|
| CS | CORNUS STOLONIFERA | RED OSIER DOGWOOD | 2 GAL | 21 |
| IV | ILEX VERTICILLATA | WINTERBERRY | 2 GAL | 17 |
| VD | VIBURNUM DENTATUM | ARROWWOOD | 5 GAL | 15 |

NOTE: TOTAL DENSITY OF COMBINED SPECIES TO BE AT OR GREATER DENSITY THAN 1 PLANT TO 40 SQUARE FEET. ALL PLANTS TO BE 12" TO 18" HEIGHT SIZE.

### FILTER BASIN PLANTING LIST

| KEY | BOTANICAL NAME | COMMON NAME | SIZE | QUANTITY FB #1 | QUANTITY FB #2 | QUANTITY FB #3 |
|---|---|---|---|---|---|---|
| CA | CALAMAGROSTIS ACUTIFOLIA 'KARL FOERSTER' | FEATHER REED GRASS | 2 GAL | 3 | 2 | 10 |
| PV | PANICUM VIRGATUM 'SHENANDOAH' | SHENANDOAH SWITCH GRASS | 2 GAL | 3 | 3 | 8 |
| EP | ECHINACEA PURPUREA 'PRAIRE SPLENDOR' | PURPLE CONE FLOWER | 2 GAL | 10 | 8 | 12 |
| HR | HEMEROCALLIS 'HAPPY RETURNS DAYLILY' | HAPPY RETURNS DAYLILY | 2 GAL | 8 | 8 | 10 |
| RF | RUDBECKIA FULDIDA 'GOLDSTURM' | BLACK-EYED SUSAN | 2 GAL | 8 | 8 | 8 |

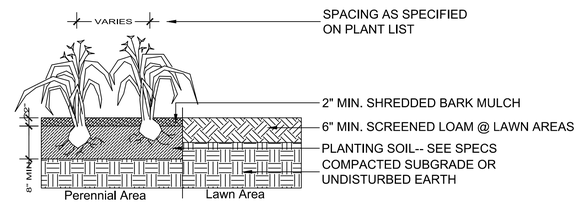


PERENNIAL PLANTING DETAIL
NTS

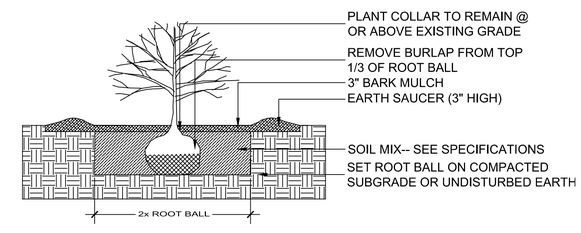


SHRUB PLANTING DETAIL
NTS

| Rev. | Desc. | Drwn | Date |
|---|---|---|---|
| | | | |

Field Book/Data Collector Files

**HART BROOK WATER QUALITY RESTORATION**
**LEWISTON INDUSTRIAL PARK - PHASE 1**

LANDSCAPE PLAN

Drwn JJE | Survey | Design JJE | Chk'd

City of LEWISTON Maine
DEPARTMENT OF PUBLIC WORKS
ENGINEERING DIVISION
103 Adams Avenue P.O. Box 479
Lewiston, Maine 04243-0479
Tel 207-513-3003 FAX 207-784-5647

Scale
Plan --- Profile --- Horz. 1"=2' Vert.

File No. 9-474-15

Date 12/17/14

Sheet 6 OF 9

PLAN VIEW

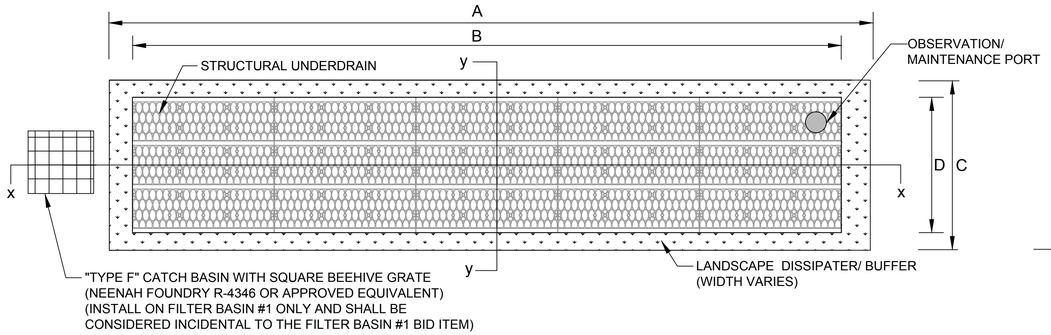


SECTION Y-Y

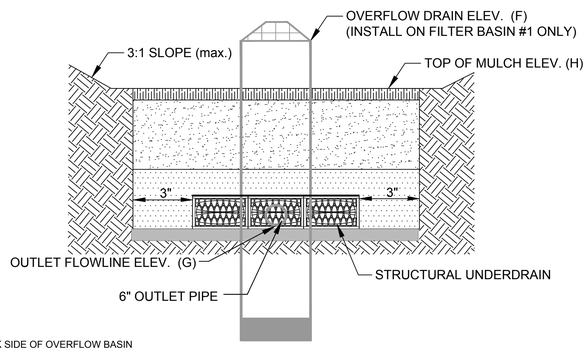


SECTION X-X

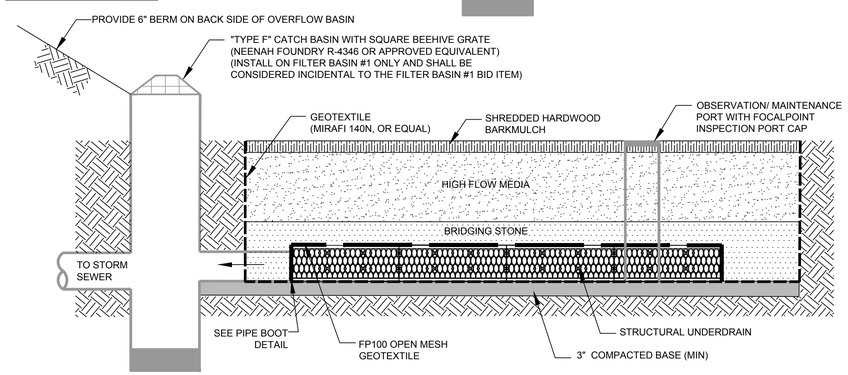


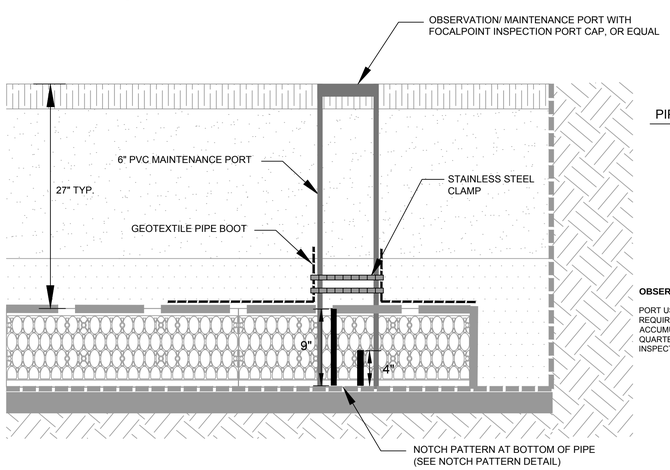


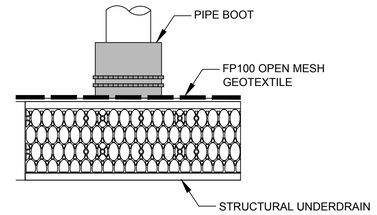


OBSERVATION/ MAINTENANCE PORT CONNECTION

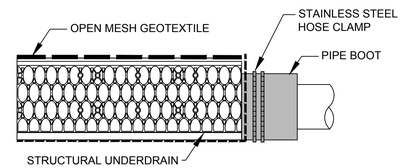


OUTLET/ INLET PIPE CONNECTION

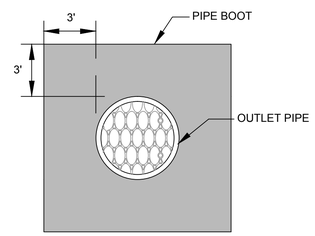


FRONT VIEW

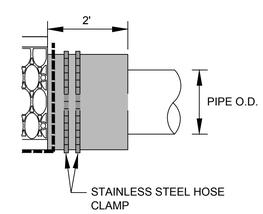


SIDE VIEW

PIPE BOOT DETAIL

PIPE NOTCH PATTERN DETAIL

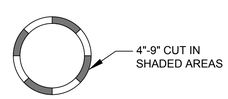


**OBSERVATION/ MAINTENANCE PORT**

PORT USED FOR INSPECTION PURPOSES AND FOR SYSTEM MAINTENANCE AS REQUIRED. WATER SHALL BE PUMPED INTO THE SYSTEM AND RESUSPEND ACCUMULATED SEDIMENT. MINIMUM REQUIRED MAINTENANCE INCLUDES A QUARTERLY INSPECTION FOR THE FIRST YEAR OF OPERATION AND A YEARLY INSPECTION THEREAFTER FLUSH AS NEEDED.

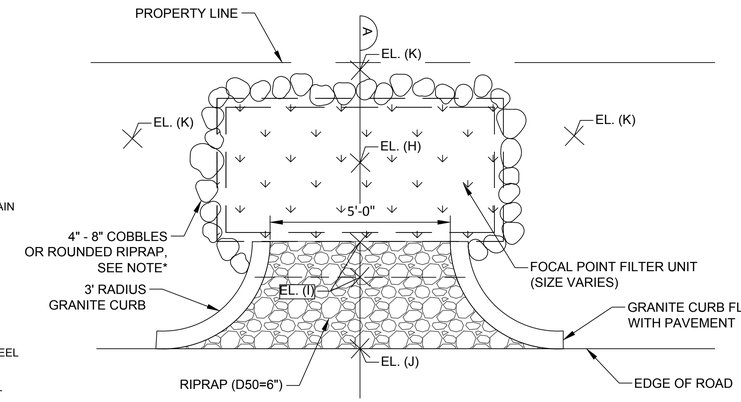


PLAN
SCALE: 1"=2'

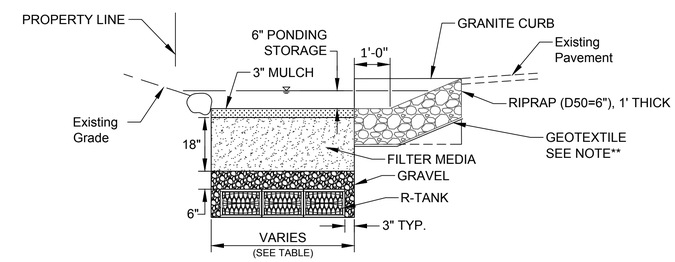


SECTION A
SCALE: 1"=2'

* 4"-8" COBBLES OR ROUNDED RIPRAP WILL BE CONSIDERED INCIDENTAL TO THE FILTER BASIN BID ITEM.
** GEOTEXTILE SHALL BE MIRAFI 140-N OR APPROVED EQUAL AND SHALL BE CONSIDERED INCIDENTAL TO THE RIPRAP (D50=6") BID ITEM.

# FILTER BASIN DETAIL

FOCAL POINT FILTER BASIN DIMENSIONS AND ELEVATIONS

| STRUCTURE # | FILTER LENGTH (A) | UNDERDRAIN LENGTH (B) | FILTER WIDTH (C) | UNDERDRAIN WIDTH (D) | # OF R-TANK UNITS | OVERFLOW ELEV. (F) *SEE NOTE | OUTLET ELEV. (G) | TOP OF MULCH ELEV. (H) | EDGE OF RIPRAP APRON (I) | EDGE OF PAVEMENT @ OPENING. (J) | FINISHED GRADE (K) |
|---|---|---|---|---|---|---|---|---|---|---|---|
| 1 | 12 | 11 | 4 | 3.94 | 15 | 212.08 | 208.57 | 211.58 | 211.58 | 212.40 | 212.50 |
| 2 | 11 | 9.38 | 3 | 2.63 | 8 | N/A | 209.26 | 212.22 | 212.22 | 213.09 | 212.92 |
| 3 | 13 | 11.73 | 7 | 6.56 | 25 | N/A | 202.97 | 205.91 | 205.91 | 206.80 | 206.61 |

*INSTALL OVERFLOW GRATE IN FB #1 ONLY. OVERFLOW STRUCTURE FOR FB#2 IS EXISTING CATCH BASIN (RIM ELEV. = 212.72) AND OVERFLOW STRUCTURE FOR FB#3 IS NEW CATCH BASIN (RIM ELEV. = 206.41). GRADE 2"+/- DEEP SWALE TO OVERFLOW STRUCTURE.

| Rev. | Desc. | Drwn | Date |
|---|---|---|---|
| | | | |

Field Book/Data Collector Files

**HART BROOK WATER QUALITY RESTORATION**
**LEWISTON INDUSTRIAL PARK - PHASE 1**

DETAILS

Drwn JJE | Survey | Design JJE | Chk'd


City of LEWISTON Maine
DEPARTMENT OF PUBLIC WORKS
ENGINEERING DIVISION
103 Adams Avenue P.O. Box 479
Lewiston, Maine 04243-0479
Tel.207-513-3003 FAX207-784-5647


Scale
Plan --- Profile --- Horz. --- Vert.

File No. 9-474-15

Date 12/17/14

Sheet 7 OF 9

# SUNTREE TECHNOLOGIES INC.® NUTRIENT SEPARATING BAFFLE BOX™

## MODEL NO: NSBB-5-10-90

**PATENTED**
AND PATENTS PENDING

FLOW & BY-PASS SPECIFICATIONS FOR BIOMASS SEPARATING SCREEN SYSTEM, SEDIMENT COLLECTION CHAMBERS, AND SKIMMER SPECIFICATIONS

1. Pipe inflow area (Drawn as 24" RCP) — 3.14 sq.ft. (4.91 sq. ft for 30" SANITITE HP)

SCREEN SPECIFICATIONS:
2. Open orifice area in screen system — 21.33 sq.ft.
3. Open orifice area in screen system with 50% blockage — 10.66 sq.ft.
4. Open orifice area in screen system with 75% blockage — 5.33 sq.ft.
5. Minimum by-pass through screen system below the top surface of the pipe — 4.40 sq.ft.
6. Minimum by-pass around screen system below the top surface of the pipe — 8.86 sq.ft.
7. Screen system storage volume — 30.12 cu.ft.

SEDIMENT STORAGE:
8. Volume of first sediment chamber — 58.33 cu.ft.
9. Volume of second sediment chamber — 56.87 cu.ft.
10. Volume of third sediment chamber — 56.87 cu.ft.
11. Total sediment volume — 172.00 cu.ft.

SKIMMER SPECIFICATIONS:
12. Flow area under skimmer — 5.83 sq.ft.
13. Area of pipe in line with skimmer — 3.14 sq.ft.
14. Area between the skimmer and the outflow pipe parallel with the surface of the pipe — 7.85 sq.ft.

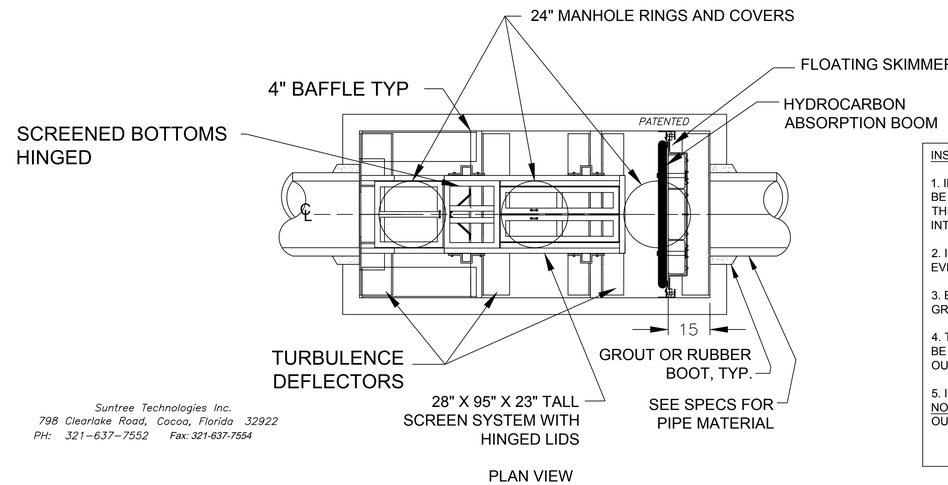


PLAN VIEW


Suntree Technologies Inc.
798 Clearlake Road, Cocoa, Florida 32922
PH: 321-637-7552 Fax: 321-637-7554


INSTALLATION NOTES:

1. INFLOW AND OUTFLOW PIPES ARE TO BE FLUSH WITH THE INSIDE SURFACE OF THE CONCRETE STRUCTURE. (CAN NOT INTRUDE BEYOND FLUSH)

2. INVERT OF OUTFLOW PIPE SHOULD BE EVEN WITH THE TOP OF THE BAFFLES.

3. BAFFLES SHOULD BE SEALED WITH GROUT.

4. THE BOTTOM OF THE SKIMMER SHOULD BE 6" BELOW THE INVERT OF THE OUTFLOW PIPE.

5. INVERT OF THE INFLOW PIPE SHOULD NOT BE BELOW THE INVERT OF THE OUTFLOW PIPE.

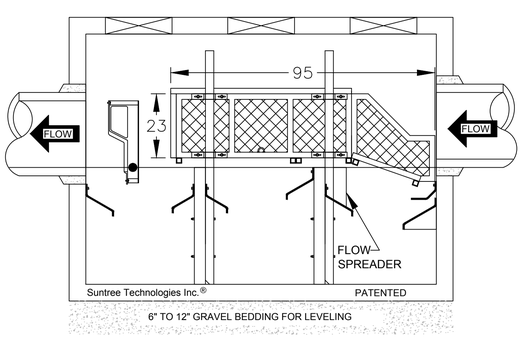


REAR VIEW

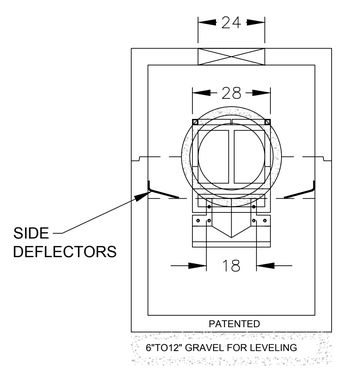


LEFT END VIEW

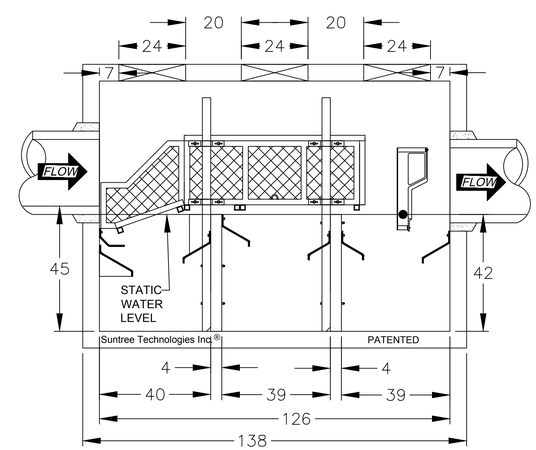


FRONT VIEW

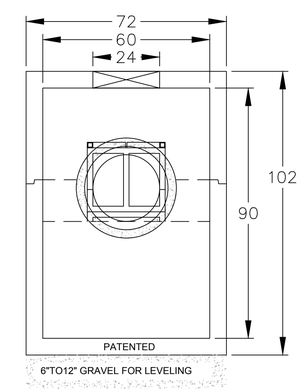


RIGHT END VIEW

Notes:

1. CONCRETE 28 DAY COMPRESSIVE STRENGTH fc-5,000 PSI.
2. REINFORCING: ASTM A-615, GRADE 60.
3. SUPPORTS AN H20 LOADING AS INDICATED BY AASHTO.
4. JOINT SEALANT: BUTYL RUBBER SS-S-00210
5. ALL WALLS, TOP, AND BOTTOM ARE 6" THICK.
6. INFLOW AND OUTFLOW PIPES ARE TO BE FLUSH WITH THE INSIDE SURFACE OF THE CONCRETE STRUCTURE. (CAN NOT INTRUDE BEYOND FLUSH)
7. HINGED LIDS FOR THE SCREEN SYSTEM ARE AVAILABLE UPON REQUEST.
8. BAFFLES WILL BE SEALED WITH GROUT TO FORM THREE WATER TIGHT CHAMBERS.

TREATMENT DESIGN FLOW
15 cfs

PEAK DESIGN FLOW
BASED ON SITE SPECIFIC CRITERIA

| | | | |
|---|---|---|---|
| SUNTREE TECHNOLOGIES INC.® 798 CLEARLAKE RD. SUITE #2 COCOA, FL. 32922 | | PROJECT: | |
| SUNTREE TECHNOLOGIES INC.® NUTRIENT SEPARATING BAFFLE BOX™ MODEL NO: NSBB-5-10-90 | | DRAWING #: 04-04-22-11-07 | |
| | | FILE NAME: NSBB-5-10-90 | |
| DATE:04/22/11 | SCALE:SF = 72 | REVISIONS: | DATE: |
| DRAFTER: T.H.2. | UNITS =INCHES | REVISIONS: | DATE: |

| Date | Drwn | Desc. | Rev. |
|---|---|---|---|
| | | | |

Field Book/Data Collector Files

**HART BROOK WATER QUALITY RESTORATION**
**LEWISTON INDUSTRIAL PARK - PHASE 1**

DETAILS

Drwn JJE | Survey | Design JJE | Chk'd


City of LEWISTON Maine
DEPARTMENT OF PUBLIC WORKS
ENGINEERING DIVISION
103 Adams Avenue P.O. Box 479
Lewiston, Maine 04243-0479
Tel.207-513-3003 FAX 207-784-5647


Scale
Plan --- Profile --- Horz. --- Vert.

File No. 9-474-15

Date 12/17/14

Sheet 8 OF 9

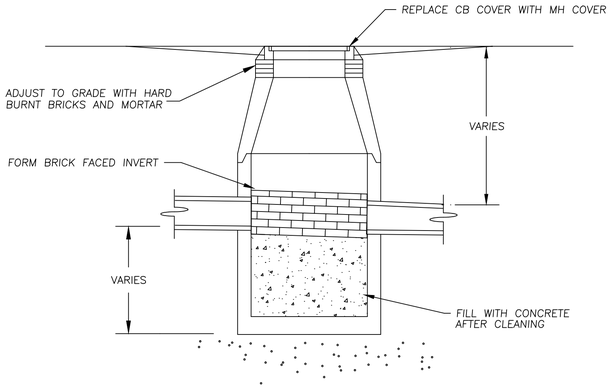


## ALTERING CATCH BASIN TO STORM MANHOLE

NTS

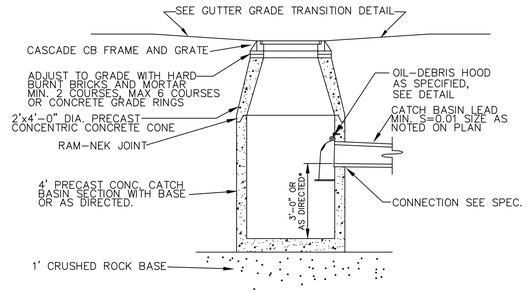


## 4'-0" DIA. CATCH BASIN

NTS

CONFIGURATION DETAIL

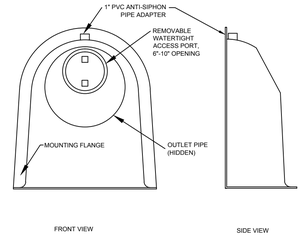


SNOUT OIL-WATER-DEBRIS SEPARATOR

TYPICAL INSTALLATION

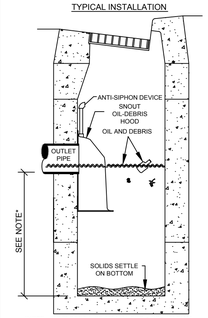


*NOTE- SUMP DEPTH OF 36" MIN. FOR < OR= 12" DIAM. OUTLET. FOR OUTLETS >OR= 15", DEPTH = 2.5-3X DIAM.

NOTES:

1. ALL HOODS AND TRAPS FOR CATCH BASINS AND WATER QUALITY STRUCTURES SHALL BE AS MANUFACTURED BY:
   BEST MANAGEMENT PRODUCTS, INC. 53 MT. ARCHER RD. LYME, CT 06371 (860) 434-0277, (860) 434-3195 FAX TOLL FREE: (800) 504-8008 OR (888) 434-0277 WEB SITE: www.bmpinc.com OR PRE-APPROVED EQUAL
   PLASTIC PIPE FACILITY (PPF), DIVISION OF E.J. PRESCOTT INC. 32 PRESCOTT STREET GARDINER, ME 04345-0600 207-582-1851 WWW.EJPRESCOTT.COM OR PRE-APPROVED EQUAL
2. ALL HOODS SHALL BE CONSTRUCTED OF A GLASS REINFORCED RESIN COMPOSITE WITH ISO GEL COAT EXTERIOR FINISH WITH A MINIMUM 0.125" LAMINATE THICKNESS.
3. ALL HOODS SHALL BE EQUIPPED WITH A WATERTIGHT ACCESS PORT, A MOUNTING FLANGE, AND AN ANTI-SIPHON VENT PIPE AND ELBOW AS DRAWN. (SEE CONFIGURATION DETAIL)
4. THE SIZE AND POSITION OF THE HOOD SHALL BE DETERMINED BY OUTLET PIPE SIZE AS PER MANUFACTURER'S RECOMMENDATION (SNOUT SIZE ALWAYS LARGER THAN PIPE SIZE).
5. THE BOTTOM OF THE HOOD SHALL EXTEND DOWNWARD A MINIMUM DISTANCE EQUAL TO 1/2 THE OUTLET PIPE DIAMETER WITH A MINIMUM DISTANCE OF 6" FOR PIPES <12" I.D.
6. THE ANTI-SIPHON VENT SHALL EXTEND ABOVE HOOD BY MINIMUM OF 3" AND A MAXIMUM OF 12" ACCORDING TO STRUCTURE CONFIGURATION.
7. THE SURFACE OF THE STRUCTURE WHERE THE HOOD IS MOUNTED SHALL BE FINISHED SMOOTH AND FREE OF LOOSE MATERIAL AND PIPE SHALL BE FINISHED FLUSH TO WALL.
8. THE HOOD SHALL BE SECURELY ATTACHED TO STRUCTURE WALL WITH 3/8" STAINLESS STEEL BOLTS AND OIL-RESISTANT GASKET AS SUPPLIED BY MANUFACTURER. (SEE INSTALLATION DETAIL)
9. INSTALLATION INSTRUCTIONS SHALL BE FURNISHED WITH MANUFACTURER SUPPLIED INSTALLATION KIT.
   INSTALLATION KIT SHALL INCLUDE:
   A. INSTALLATION INSTRUCTIONS
   B. PVC ANTI-SIPHON VENT PIPE AND ADAPTER
   C. OIL-RESISTANT CRUSHED CELL FOAM GASKET WITH PSA BACKING
   D. 3/8" STAINLESS STEEL BOLTS
   E. ANCHOR SHIELDS

US Patent # 6126817

INSTALLATION DETAIL

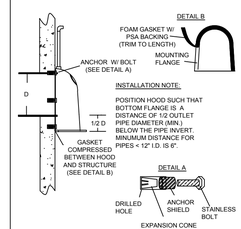


INSTALLATION NOTE:

POSITION HOOD SUCH THAT BOTTOM FLANGE IS A DISTANCE OF 1/2 OUTLET PIPE DIAMETER (MIN.) BELOW THE PIPE INVERT. MINUMUM DISTANCE FOR PIPES < 12" I.D. IS 6".

HOOD SPECIFICATION FOR CATCH BASINS AND WATER QUALITY STRUCTURES

| DESCRIPTION | DATE | SCALE |
|---|---|---|
| OIL- DEBRIS HOOD SPECIFICATION AND INSTALLATION (TYPICAL) | 09/08/00 | NONE |
| | DRAWING NUMBER SP-SN | |

*CATCH BASIN HOODS ARE ONLY REQUIRED TO BE INSTALLED ON CATCH BASINS WITH AN OUTLET PIPE 12" OR SMALLER

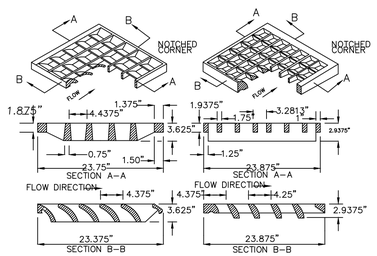


## TYPE "B" CASCADE TYPE GRATES

NTS

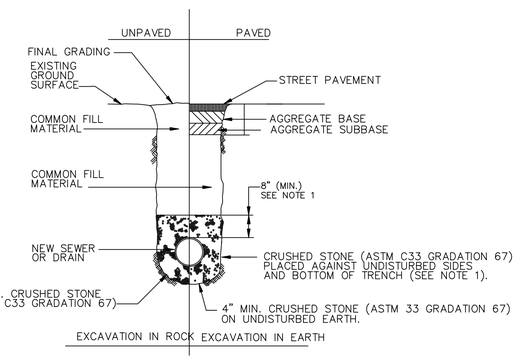


NOTE:
1. FOR PIPES OTHER THAN P.V.C., HDPE, AND POLYPROPYLENE, SELECTED COMMON FILL MAY BE USED FROM MID-DIAMETER OF PIPE TO 8" ABOVE TOP OF PIPE
2. TRENCHES LOCATED ON THE ROAD SHOULDER SHALL BE TREATED THE SAME AS STREET TRENCHES EXCEPT FOR PAVING.

## TRENCH DETAIL FOR SEWER AND DRAIN

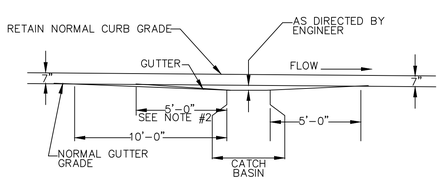


NOTE: 1. CASCADE GRATES SHALL BE INSTALLED ON GRADIENT OF THE GUTTER. THE GRATES SHALL BE DEPRESSED 2" BELOW THE NORMAL GUTTER GRADE UNLESS THIS DEPRESSION INTERFERES WITH TRAFFIC. PARALLEL BAR GRATES SHALL BE INSTALLED ON A LEVEL GRADIENT. DIMENSIONS ARE NOMINAL.

2. IF CATCH BASIN IS TO BE INSTALLED IN A LOW POINT OR INTERSECTION OF DESCENDING STREETS, GUTTER SHALL BE GRADED EQUALLY, 5' FROM BOTH SIDES OF CATCH BASIN

## GUTTER GRADE TRANSITION AT CATCH BASIN

NTS

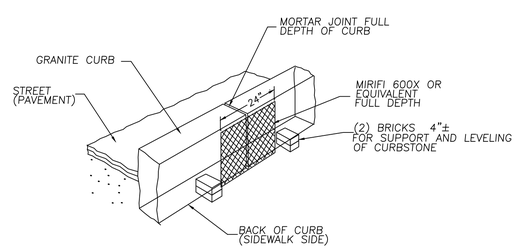


## ISOMETRIC VIEW CURB JOINT

NTS

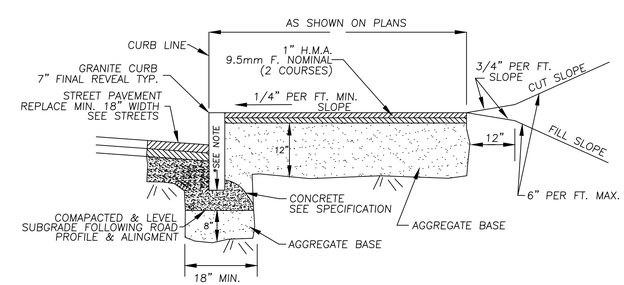


*NOTE:
CURBSTONE IS BE SET UPON STACKED BRICKS FOR TEMPORARY SUPPORT TO ACHIEVE 4"± SPACE.

## SIDEWALK AND GRANITE CURB INSTALLATION

NTS

| Date | Drwn | Desc. | Rev. | Field Book/Data Collector Files |
|---|---|---|---|---|
| | | | | |

**HART BROOK WATER QUALITY RESTORATION**
**LEWISTON INDUSTRIAL PARK - PHASE 1**

DETAILS

Drwn JJE | Survey | Design JJE | Chk'd

City of LEWISTON Maine
DEPARTMENT OF PUBLIC WORKS
ENGINEERING DIVISION
103 Adams Avenue P.O. Box 479
Lewiston, Maine 04243-0479
Tel.207-513-3003 • Fax207-784-5647

Scale
Plan ---
Profile --- Horz. --- Vert.

File No. 9-474-14

Date 12/17/14

Sheet 9 OF 9